MINGKO

36 INCHES FOREST MULCHER WITH SKID STEER

The 36-inch working width allows large areas of land to be handled in a single operation, increasing work efficiency.

ACCESSORY PARAMETER

36 inches forest mulcher with skid steer

MINGKO

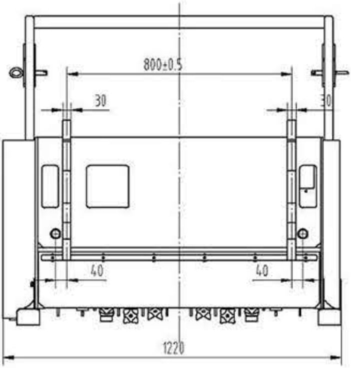
800±0.5
30
30
40
40
1220

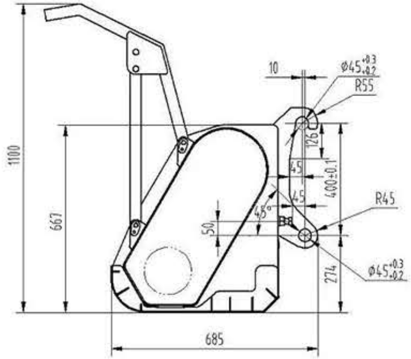
1100
667
10
Φ45$^{+0.3}_{+0.2}$
R55
126
45
45
400±0.1
45°
50
R45
274
Φ45$^{+0.3}_{+0.2}$
685

36 INCHES FOREST MULCHER

Shandong Mingko Industry Corporation

200kg

Mulcher weight

36 inches

working width

40L/min

flow rate require of Aux minimum

21 pieces

knives quantity

01

ELECTRIC MACHINE

Strong motor 23L displacement

23L

DISPLACEMENT

02

MULCHER WITH BELT

The belt has a certain elasticity, which can play the role of buffering and absorbing vibration in the transmission process, reduce the damage of shock and vibration to the spindle and related components, and make the operation more stable.

Mulcher with belt and the belt drives the spindle

03

AUX CONNECTOR

With international standard Aux connector.

04

ANTI-COLLISION CURTAIN

With Anti-collision curtain to stop hurting people around

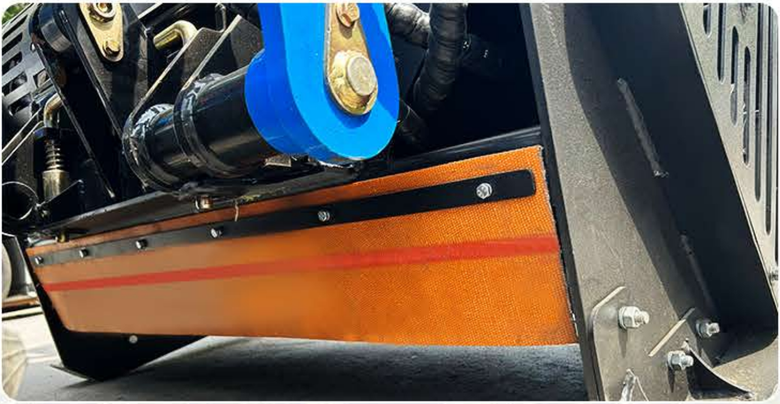

MKT1000

Product parameter

Shandong Mingko Industry Corporation

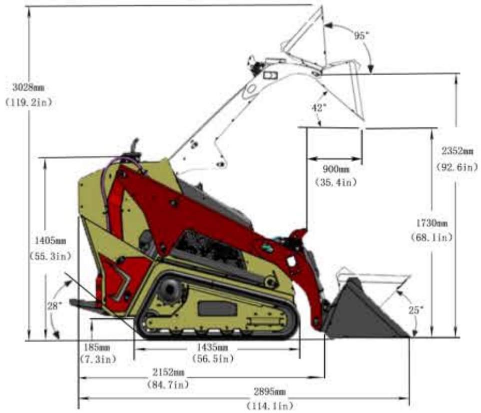
3028mm
(119.2in)
95°
42°
900mm
(35.4in)
2352mm
(92.6in)
1730mm
(68.1in)
1405mm
(55.3in)
28°
25°
185mm
(7.3in)
1435mm
(56.5in)
2152mm
(84.7in)
2895mm
(114.1in)

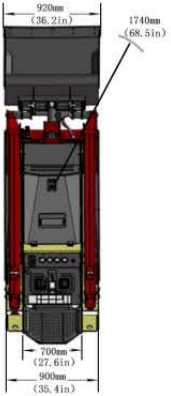
920mm
(36.2in)
1740mm
(68.5in)
700mm
(27.6in)
900mm
(35.4in)

MKT1000 Product parameter

	With Rubber Track	
	Perkins 403J-11	
	Metric	**U.S.**
Key Specifications		
Rated Power (KW)	18.4(25Hp)	
Operating Weight	1538 Kg	3390 Lb
Rated Operating Capacity	454 kg	1000 Lb
Ground Pressure (Rubber)	2800 Kg/m²	3.98 Psi
Auxiliary Std Flow	45 L/Min	12 Gal/Min
Rotating speed (Rpm)	2800	
Width	899mm	35.4 inch

Height to Bucket Hinge Pin	2352mm	92.6inch
Noise (Db)	≤95	
Engine		
Emissions Tier	EU NRM 97/68/EC Stage 5	
	EPA Tier 4 Final	
Engine Cooling	Liquid	
Engine Fuel	Diesel	
Displacement	1.131 L	69 in^3
Number of Cylinders	3	
Performance		
Rated Operating Capacity (ISO)	453KG	1000LB
Tipping Load	1315 KG	2898 Lb
Travel Speed	5.8 Km/h	3.52 Mph
Travel Speed - Reverse	3.9 Km/h	2.4 Mph
Capacities		
Fuel Tank	25 L	6.6 Gal
hydraulic system		
Hydraulic oil tank capacity	22 L	5.8 Gal
Pump Capacity	45 L/ Min	12 Gal/Min
System Relief @ Quick Couplers	200 Bar	2900 Psi

MINGKO

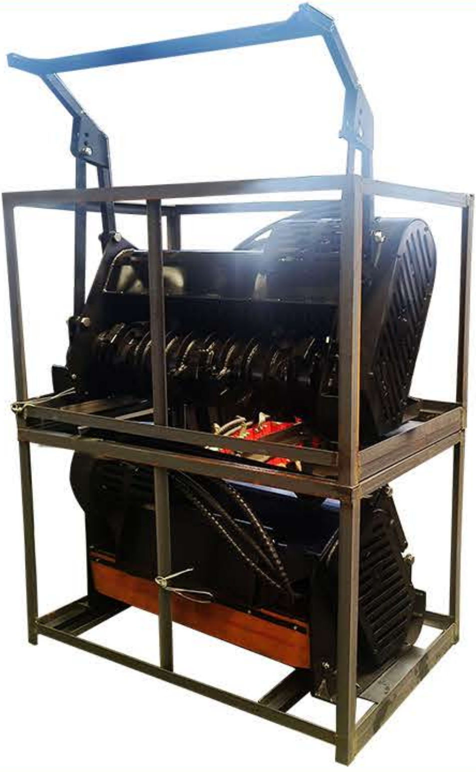DISPLAY OF FITTINGS