72 INCHES FOREST MULCHER

1830MM

WORKING WIDTH

Product advantage

MINGKO

01

Efficient reclamation

It can clear and reclaim wasteland quickly and effectively, which greatly improves the efficiency of land development.

02

Powerful driving force

Usually equipped with a powerful engine, with enough power to cope with hard soil, weeds and bushes.

03

Adapt to complex terrain

It has good passability and adaptability, and can operate on rugged and steep land.

04

Save manpower

Instead of a large number of manual labor, reduce the work intensity of workers.

05

Depth control

The depth of reclamation can be accurately controlled to meet the needs of different land development and planting.

ACCESSORY PARAMETER

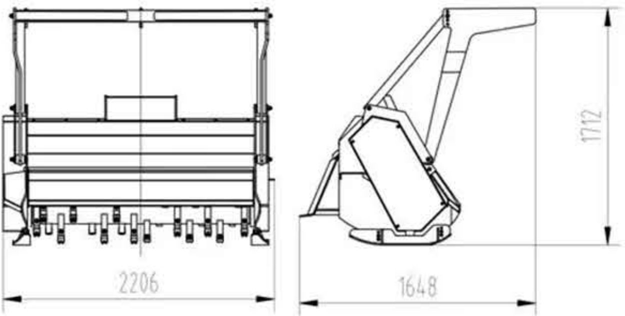

72 INCHES FOREST MULCHER

Shandong Mingko Industry Corporation

72 inches working width	**44 pieces** knives quantity
18MPA Working pressure	**120-150L/min** Aux Flow requirement
2500rmp Rotate speed	**1150kg** Weight

1648mm*2206mm*1712mm

Mulcher Size

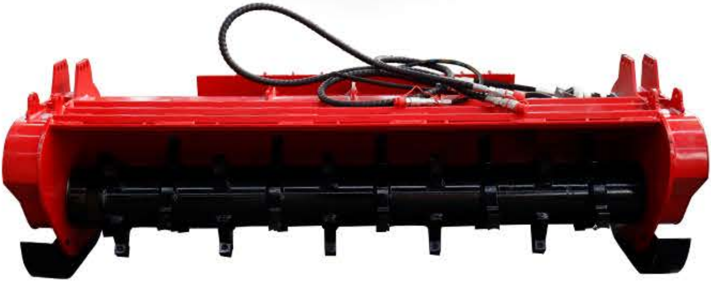

ALLOY STEEL KNIVES

high-strength alloy steel knives ,more than 320mpa

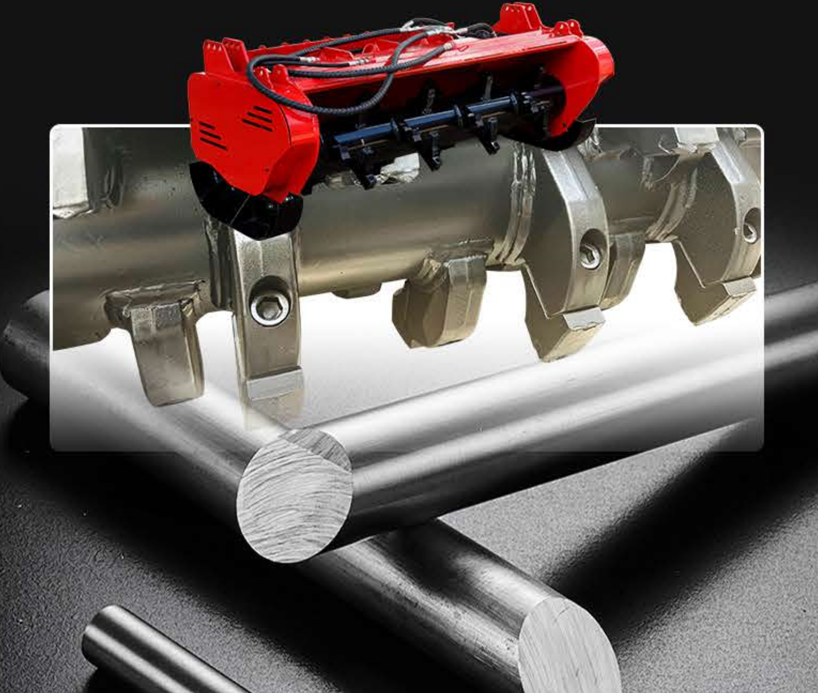

wear-resistant

Not easy to rust

Strong
bearing capacity

MINGKO

EFFICIENT RECLAMATION

Instead of a large number of manual labor, reduce
the work intensity of workers

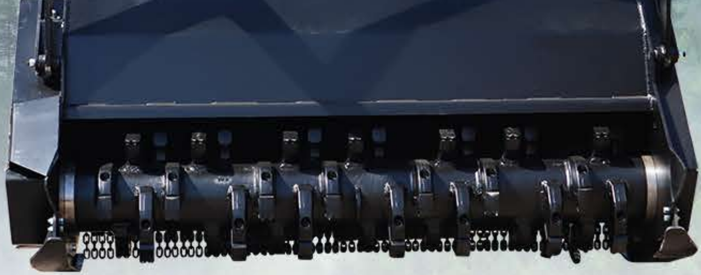

One machine is equal to a dozen labor forces

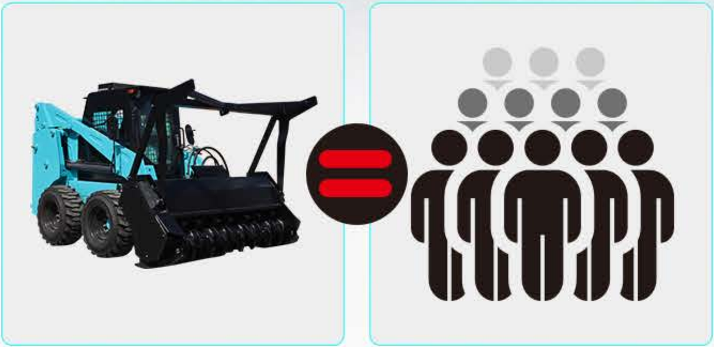

MINGKO

ANTI-COLLISION CHAIN

With Anti-collision chains to stop hurting people around

PRODUCTS WIDELY USED

The pioneer machine mainly has the following uses: reclaiming wasteland, land consolidation, clearing obstacles, reforestation, road construction preparation, mine reclamation and so on.

RECLAMATION

The clearing and initial treatment of undeveloped land, such as areas overgrown with weeds, dense trees, or hard soil, to make it suitable for agricultural cultivation, forestry development, or other uses.

LAND CONSOLIDATION

Deep ploughing, leveling, and breaking of land that has been cultivated but needs to be replanned or improved to improve soil structure and topography in preparation for more efficient agricultural production.

LARGE-SCALE PROJECT FOUNDATION PREPARATION

For example, in the construction of large-scale factories, industrial parks and other projects, the pioneer machine is used to preliminary finish the site.

MINGKO

Product shooting

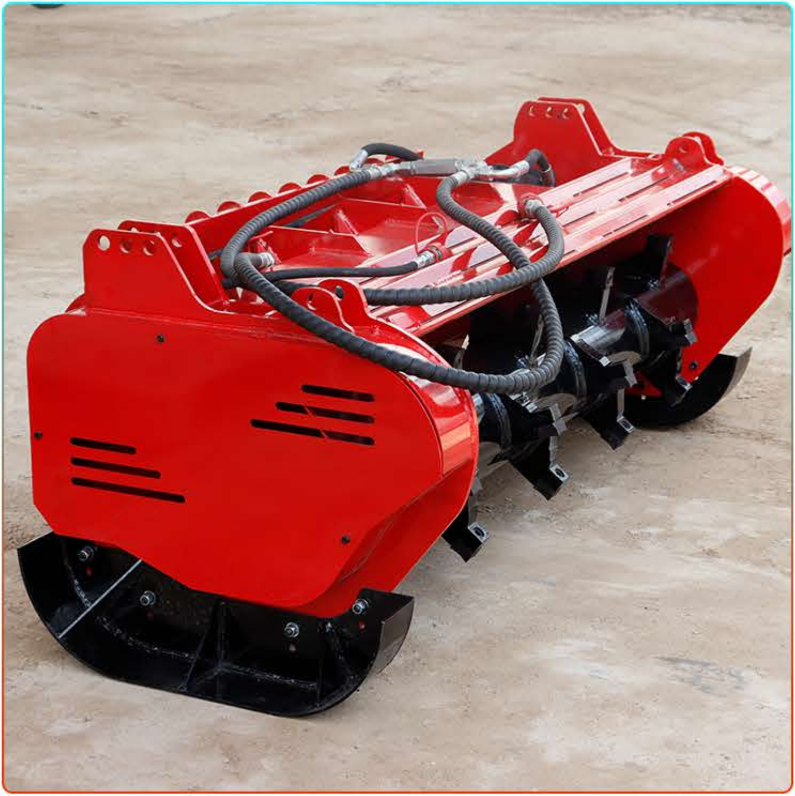Shandong Mingko Industry Corporation